Vertex LCD Inc.
www.vertexlcd.com

Vertex LCD Inc.
600 S. Jefferson St. Unit K Placentia, CA 92870
TEL: 714-223-7111 FAX: 714-223-7711

FINAL PRODUCT INFORMATION

(All information in this technical data sheet is subject to change without notice.)

Updated: 1/4/2011

12.1" XGA Very High Bright TFT-LCD

LVM121XSB-411-L01

PRODUCT ENGINEERING DEPT. Vertex LCD Inc.			
	Name	Signature	Date
CREATED BY	Hanna Lee	Hanna Lee	1/4/2011
REVIEWED BY	Brian Yi		1/4/2011
REVIEWED BY	Eunice Lee		1/4/2011
REVIEWED BY	Moses Choi		1/4/2011
REVIEWED BY	Eric Kim		1/4/2011

© All Rights Reserved

Vertex LCD Inc.
600 S. Jefferson St. Unit K Placentia, CA 92870
TEL: 714-223-7111 FAX: 714-223-7711

CONTENTS

NO.	ITEM	Page
-	COVER	1
-	CONTENTS	2
-	REVISION HISTORY	3
1	GENERAL DESCRIPTION	4
2	ABSOLUTE MAXIMUM RATINGS	4
3	ELECTRICAL CHARACTERISTICS	5
4	POWER ON/OFF SEQUENCE	6
5	INTERFACE CONNECTION	7
5.1	RECOMMENDED LVDS TRANSMITTER	8, 9
6	SIGNAL TIMING SPECIFICATIONS	10
7	TIMING WAVE FORM	11
8	COLOR INPUT DATA REFERENCE	12
9	BLOCK DIAGRAM	13
10	OPTICAL SPECIFICATIONS	14
11	MECHANICAL CHARACTERISTICS	15
12	MECHANICAL SPECIFICATIONS	16, 17
13	RELIABILITY	18
14	PACKING FORM	19
15	PRECAUTIONS	20
15.1	MOUNTING PRECAUTION	20
15.2	OPERATING PRECAUTION	20, 21
15.3	ELECTROSTATIC DISCHARGE CONTROL	21
15.4	STORAGE	21
15.5	HANDLING PRECAUTION FOR PROTECTION FILM	21
A	OPTICAL CHARACTERISTIC MEASUREMENT EQUIPMENT AND METHOD	22
B	LUMINANCE	22
C	RESPONSE TIME	23
D	VIEWING ANGLE	23

© All Rights Reserved

Vertex LCD Inc.
www.vertexlcd.com

Vertex LCD Inc.
600 S. Jefferson St. Unit K Placentia, CA 92870
TEL: 714-223-7111 FAX: 714-223-7711

Revision History

Rev	ECN No.	Description of changes	Date	Prepared
0		Initial release	4/25/06	Brian Yi
A		-Change TENTATIVE PRODUCT INFORMATION → FINAL PRODUCT INFORMATION (All information in this technical data sheet is tentative and subject to change without notice.) →(All information in this technical data sheet is subject to change without notice.)	7/11/07	Eric Kim
B	VE-ECN-09-0004	: -Mechanical Specification changed. (P16) 9.89mm, 11.4mm, 13.72mm → 9.59mm, 11.10mm, 13.42mm : -13 on backlight only deleted. (P18) : -14. Packing Form modified. (P19) : -15.2 (6) Thermal Map added. (P20~P21)	6/30/09	Tom Kim
C	VE-ECN-10-0036	-Polarizer is changed to AG(pg 4), -Response time, Viewing angle is updated (pg 14) -reliability condition changed (pg 22)	1/4/2011	H. Lee

© All Rights Reserved

Vertex LCD Inc.
www.vertexlcd.com

Vertex LCD Inc.
600 S. Jefferson St. Unit K Placentia, CA 92870
TEL: 714-223-7111 FAX: 714-223-7711

1. General Description

LVM121XSB-411-L01 is 12.1" Color Active Matrix Liquid Crystal Display with an integral LED backlight system. The matrix employs amorphous silicon Thin Film Transistor as the active element. It is a transmissive type display operating in the normally black mode. This TFT-LCD has a 12.1 inch diagonally measured active display area with XGA resolution (1024 horizontal by 768 vertical pixel array). Each pixel is divided into Red, Green and Blue sub-pixels or dots which are arranged in vertical stripes. Gray scale or the brightness of the sub-pixel color is determined with a 6-bit gray scale signal for each dot, thus presenting a palette of more than 262,144 colors.

The LVM121XSB-411-L01 is intended to support applications where high brightness is a critical factor. In combination with the vertical arrangement of the sub-pixels, the LVM121XSB-411-L01 characteristics provide an excellent flat panel display for avionics (general & military), rugged environment, outdoor or anywhere daylight applications required.

General Specification

General specifications are summarized in the following table:

ITEM	SPECIFICATION
Active screen size	12.1 inches(30.7cm) diagonal 245.76(H) X 184.32(V) mm
Outline dimensions	274.0(H) × 206.3(V) × 13.6(D) mm
Pixel pitch	0.240(H) mm × 0.240(V) mm
Pixel format	1024(H) X 768(V) pixels
Color Pixel Arrangement	RGB stripe arrangement
Color depth	6-bit, 262,144 colors
Brightness	1,200 cd/m^2
Power Consumption (LCD & Backlight only)	Total 13.5 Watt, typ. (0.8Watt @Vcc, 12.7 Watt @Lamp)
Weight	900g (typ)
Display operating mode	transmissive mode, normally Black
Surface treatments	hard coating(3H), anti-glare, Haze 25
Backlight Unit	White LED

2. Absolute Maximum Rating

Parameter	symbol	Values		Units	Notes
		Min.	Max.		
Power Input Voltage					
Display	V_{CC}	-0.3	+4.0	Vdc	at 25°C
Backlight	V_{cc}	0.0	+12.0	Vdc	
	I_{cc}	0.0	2.16	A	1
Operating Temperature	T_{OP}	-25	+85	°C	2
Storage Temperature	T_{ST}	-25	+85	°C	2

Note 1: Humidity ≤ 90% RH. No condensation.

© All Rights Reserved

Vertex LCD Inc.
600 S. Jefferson St. Unit K Placentia, CA 92870
TEL: 714-223-7111 FAX: 714-223-7711

3. Electrical Characteristics

The LVM121XSB-411-L01 requires two power inputs. One is employed to power the LCD electronics and to drive the TFT array and liquid crystal. The second input which powers the LED backlight, is typically generated by LED driver board. The LED driver board is an external unit to the LCD.

Parameter	Symbol	Values			Units	Notes
		Min.	Typ.	Max.		
MODULE:						
Power Supply Input Voltage	V_{CC}	3.0	3.3	3.6	Vdc	Vcc = 3.3 V
Power Supply Input Current	I_{CC}	-	0.240	-	A	1, 2
Power Consumption	P_C	-	0.7	-	Watts	1, 2
LED Backlight:						
Operating Voltage	V_{BL}			17.7	Vdc	4
Operating Current	I_{BL}			0.72	Adc	4
Power Consumption				12.74	Watts	3
Life Time		40,000	50,000		Hrs	

Notes: 1. The current draw and power consumption specified is for 3.3 Vdc at 25°C and fv at 60Hz.(at Black pattern displayed)

2. Logic level are specified for Vcc of 3.3 Vdc at 25°C. The values specified apply to all logic inputs; Hsync, Vsync, Clock, data signals, etc.

3. The life time is determined as the time at which brightness of lamp is 50% compare to that of initial value at the typical LED current & at ambient temperature of 25°C.

4. LVM121XSB-411-L01 load voltage should be about 17.7V at 360mA max current per top and bottom sides.

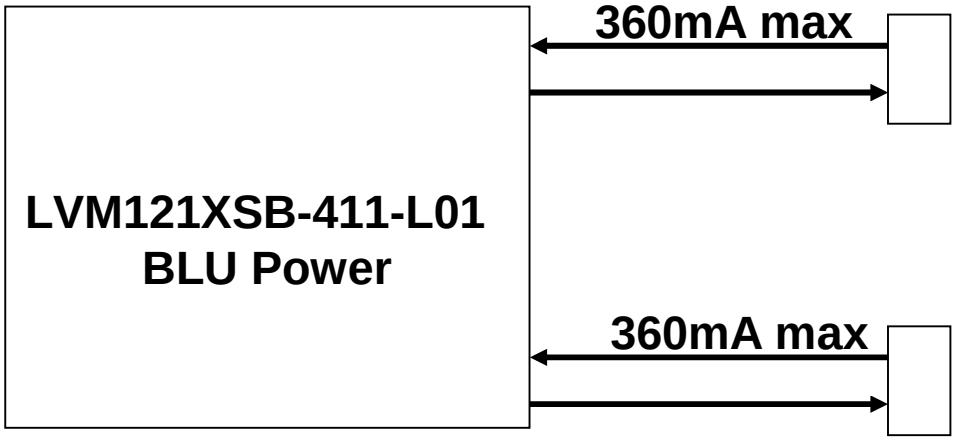

© All Rights Reserved

Vertex LCD Inc.
600 S. Jefferson St. Unit K Placentia, CA 92870
TEL: 714-223-7111 FAX: 714-223-7711

4. Power On/Off Sequences

To prevent a latch-up or DC operation of the LCD module, the power on/off sequence should be as shown below.

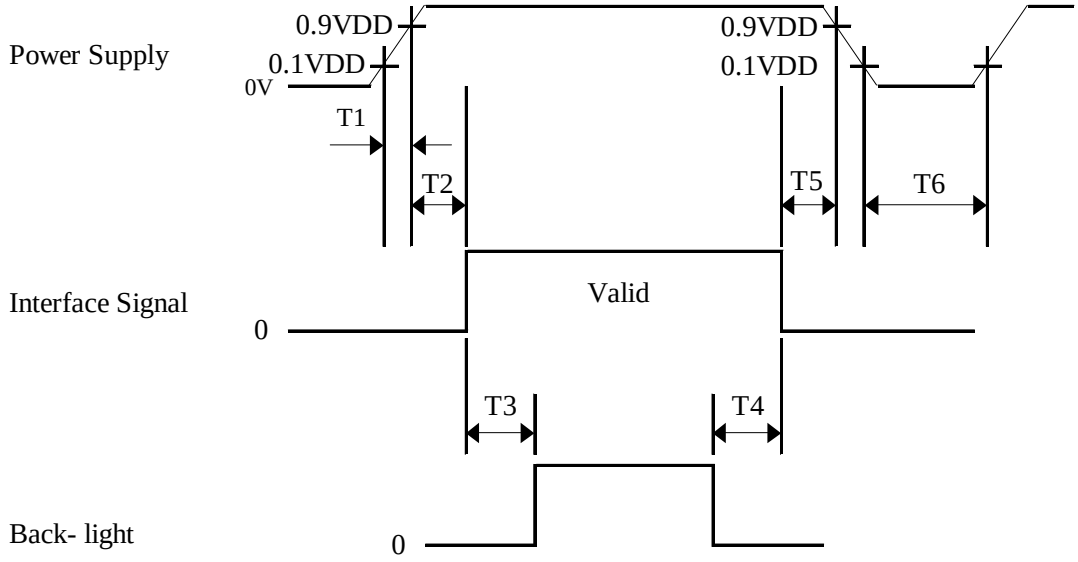

- $0 < T1 \leq 10$ ms
- $0 < T2 \leq 50$ ms
- 100 ms $\leq$ T3, T4
- $0 < T5 \leq 50$ ms
- 1 sec $<$ T6

Note: 1. Please avoid floating state of interface signal at invalid period.
2. When the interface signal is invalid, be sure to pull down the power supply for LCD Vcc to 0 Vcd.
3. Backlight power must be turn on after power supply for LCD and interface signal is valid.

© All Rights Reserved

Vertex LCD Inc.
600 S. Jefferson St. Unit K Placentia, CA 92870
TEL: 714-223-7111 FAX: 714-223-7711

5. Interface Connections

CN 1(interface signal): LVM121XSB-411-L01 uses 20 pin connector for module electronics.
Used connector: DF19L-20P-1H (HIROSE Electric Co. LTD) Matching side: DF19G-20S-1C (HIROSE)

Pin	Symbol	Description
1	V_{DD1}	Power supply +3.3V
2	V_{DD2}	Power supply +3.3V
3	Vss	Ground
4	Vss	Ground
5	RIN0-	Transmission Data of Pixel 0 (-)
6	RIN0+	Transmission Data of Pixel 0 (+)
7	V_{SS}	Ground
8	RIN1-	Transmission Data of Pixel 1 (-)
9	RIN1+	Transmission Data of Pixel 1 (+)
10	V_{SS}	Ground
11	RIN2-	Transmission Data of Pixel 2 (-)
12	RIN2+	Transmission Data of Pixel 2 (+)
13	V_{SS}	Ground
14	RCLK IN-	Sampling Clock (-)
15	RCLK IN+	Sampling Clock (+)
16	V_{SS}	Ground
17	NC	No Connection
18	NC	No Connection
19	V_{SS}	Ground
20	V_{SS}	Ground

CN 2(backlight): LVM121XSB-411-L01 employs Molex 51004-0200 or equivalent connectors for the LED backlight.

Pin	Symbol	Description	Notes
1	V	Lamp power input	
2	Ground	Ground	

© All Rights Reserved

Vertex LCD Inc.
600 S. Jefferson St. Unit K Placentia, CA 92870
TEL: 714-223-7111 FAX: 714-223-7711

5.1. Recommended Transmitter to LVM121XSB-411-L01

6Bit Transmitter (THC63LVDM63A)

THC63LVDM63A					LVM121XSB-411-L01 Interface (CN1)	
Input Terminal No.		Input Signal (Graphic controller output signal)		Output Signal Symbol		
Symbol	THC63LVDM63A	Symbol	Function		Terminal	Symbol
TIN0	44	R0	Red Pixels Display Data (LSB)	OUT0 - OUT0+	No. 5 No. 6	IN0 – IN0 +
TIN1	45	R1	Red Pixels Display Data			
TIN2	47	R2	Red Pixels Display Data			
TIN3	48	R3	Red Pixels Display Data			
TIN4	1	R4	Red Pixels Display Data			
TIN5	3	R5	Red Pixels Display Data (MSB)			
TIN6	4	G0	Green Pixels Display Data (LSB)			
TIN7	6	G1	Green Pixels Display Data	OUT1 – OUT1 +	No. 7 No. 8	IN1 – IN1 +
TIN8	7	G2	Green Pixels Display Data			
TIN9	9	G3	Green Pixels Display Data			
TIN10	10	G4	Green Pixels Display Data			
TIN11	12	G5	Green Pixels Display Data (MSB)			
TIN12	13	B0	Blue Pixels Display Data (LSB)			
TIN13	15	B1	Blue Pixels Display Data			
TIN14	16	B2	Blue Pixels Display Data	OUT2 – OUT2 +	No. 9 No. 10	IN2 – IN2 +
TIN15	18	B3	Blue Pixels Display Data			
TIN16	19	B4	Blue Pixels Display Data			
TIN17	20	B5	Blue Pixels Display Data (MSB)			
TIN18	22	Hsync	Horizontal Synchronization Signal			
TIN19	23	Vsync	Vertical Synchronization Signal			
TIN20	25	DE	Compound Synchronization Signal			
CLK IN	26	NCLK	Data Sampling Clock	CLK OUT – CLK OUT +	No. 11 No. 12	CLK IN – CLK IN +

© All Rights Reserved

Vertex LCD Inc.
600 S. Jefferson St. Unit K Placentia, CA 92870
TEL: 714-223-7111 FAX: 714-223-7711

8 Bit Transmitter (THC63LVDM83A)

THC63LVDM83A					LVM121XSB-411-L01 Interface (CN1)	
Input Terminal No.		Input Signal (Graphic controller output signal)		Output Signal Symbol		
Symbol	THC63LVDM83	Symbol	Function		Terminal	Symbol
TIN0	51	R0	Red Pixels Display Data (LSB)	OUT0 – OUT0 +	No. 5 No. 6	IN0 – IN0 +
TIN1	52	R1	Red Pixels Display Data			
TIN2	54	R2	Red Pixels Display Data			
TIN3	55	R3	Red Pixels Display Data			
TIN4	56	R4	Red Pixels Display Data			
TIN6	3	R5	Red Pixels Display Data (MSB)			
TIN7	4	G0	Green Pixels Display Data (LSB)			
TIN8	6	G1	Green Pixels Display Data	OUT1 – OUT1 +	No. 7 No. 8	IN1 – IN1 +
TIN9	7	G2	Green Pixels Display Data			
TIN12	11	G3	Green Pixels Display Data			
TIN13	12	G4	Green Pixels Display Data			
TIN14	14	G5	Green Pixels Display Data (MSB)			
TIN15	15	B0	Blue Pixels Display Data (LSB)			
TIN18	19	B1	Blue Pixels Display Data			
TIN19	20	B2	Blue Pixels Display Data	OUT2 – OUT2 +	No. 9 No. 10	IN2 – IN2 +
TIN20	22	B3	Blue Pixels Display Data			
TIN21	23	B4	Blue Pixels Display Data			
TIN22	24	B5	Blue Pixels Display Data (MSB)			
TIN24	27	Hsync	Horizontal Synchronization Signal			
TIN25	28	Vsync	Vertical Synchronization Signal			
TIN26	30	DE	Compound Synchronization Signal			
TIN27	50	NC	Non Connection (open)	OUT3 – OUT3 +		
TIN5	2	NC	Non Connection (open)			
TIN10	8	NC	Non Connection (open)			
TIN11	10	NC	Non Connection (open)			
TIN16	16	NC	Non Connection (open)			
TIN17	18	NC	Non Connection (open)			
TIN23	25	NC	Non Connection (open)			
CLK IN	31	NCLK	Data Sampling Clock	CLK OUT – CLK OUT +	No. 11 No. 12	CLK IN – CLK IN +

© All Rights Reserved

Vertex LCD Inc.
600 S. Jefferson St. Unit K Placentia, CA 92870
TEL: 714-223-7111 FAX: 714-223-7711

6. Signal Timing Specification

The 12.1XGA LCM is only operated by the DE mode

Item		Symbols	Min	Typ	Max	Units
Clock	Frequency	1/Tc	-	65	80	MHz
	High Time	Tch	4.5	-	-	Ns
	Low Time	Tcl	4.5	-	-	Ns
Data	Setup Time	Tds	2.7	-	-	Ns
	Hold Time	Tdh	0	-	-	Ns
Data Enable Setup Time		Tes	2.7	-	-	Ns
Frame Period		Tv	772	806	1022	Lines
Vertical Display Period		Tvd	768	768	768	Lines
One Line Scanning Period		Th	1100	1344	2046	Clocks
Horizontal Display Period		Thd	1024	1024	1024	Clocks

Note 1) Refer to TIMING CHART and LVDS (THC63LVDF64A) specifications by Thine Electronics Inc.
Note 2) If NCLK is fixed to "H" or "L" level for certain period, the panel may be damaged.
Note 3) Please adjust LCD operating signal timing and FL driving frequency, to optimize the display quality.
Note 4) Do not hold NCLK on "H" level nor "L" level during VDD (+3.3V) is supplied. When it holds on, DC voltage supplies to liquid crystal materials and it may cause damage to liquid crystal materials.
Note 5) Do not make *tv, tvhd* and *tvds* fluctuate.
If *tv, tvhd* and *tvds* are fluctuated, then panel displays black.
Note 6) NCLK count of each Horizontal Scanning Time should be always the same.
V-Blanking period should be "*n*" X "Horizontal Scanning Time". (*n*: integer)

-LVDS Rx interface timing parameter

Item	Symbol	Min	Typ.	Max	Unit	Remark
CLKIN Period	$_tRCIP$	12.5	15.38	-	nsec	
Input data 0	$_tRIP1$	-0.4	0.0	+0.4	nsec	
Input data 1	$_tRIP0$	1 * $_tRIPC$/7-0.4	1 * $_tRIPC$/7	1 * $_tRIPC$/7+0.4	nsec	
Input data 2	$_tRIP6$	2 * $_tRIPC$/7-0.4	2 * $_tRIPC$/7	2 * $_tRIPC$/7+0.4	nsec	
Input data 3	$_tRIP5$	3 * $_tRIPC$/7-0.4	3 * $_tRIPC$/7	3 * $_tRIPC$/7+0.4	nsec	
Input data 4	$_tRIP4$	4 * $_tRIPC$/7-0.4	4 * $_tRIPC$/7	4 * $_tRIPC$/7+0.4	nsec	
Input data 5	$_tRIP3$	5 * $_tRIPC$/7-0.4	5 * $_tRIPC$/7	5 * $_tRIPC$/7+0.4	nsec	
Input data 6	$_tRIP2$	6 * $_tRIPC$/7-0.4	6 * $_tRIPC$/7	6 * $_tRIPC$/7+0.4	nsec	

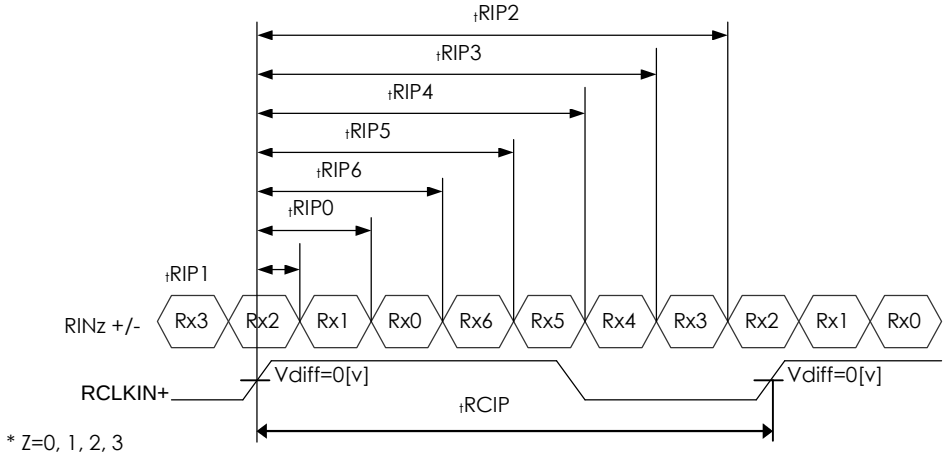

* Vdiff = (RINz+)-(RINz-), (RCLKIN+)-(RCLKIN-)

© All Rights Reserved

Vertex LCD Inc.
600 S. Jefferson St. Unit K Placentia, CA 92870
TEL: 714-223-7111 FAX: 714-223-7711

7. Timing Wave Form(DE Mode)

Vertical Timing Waveforms

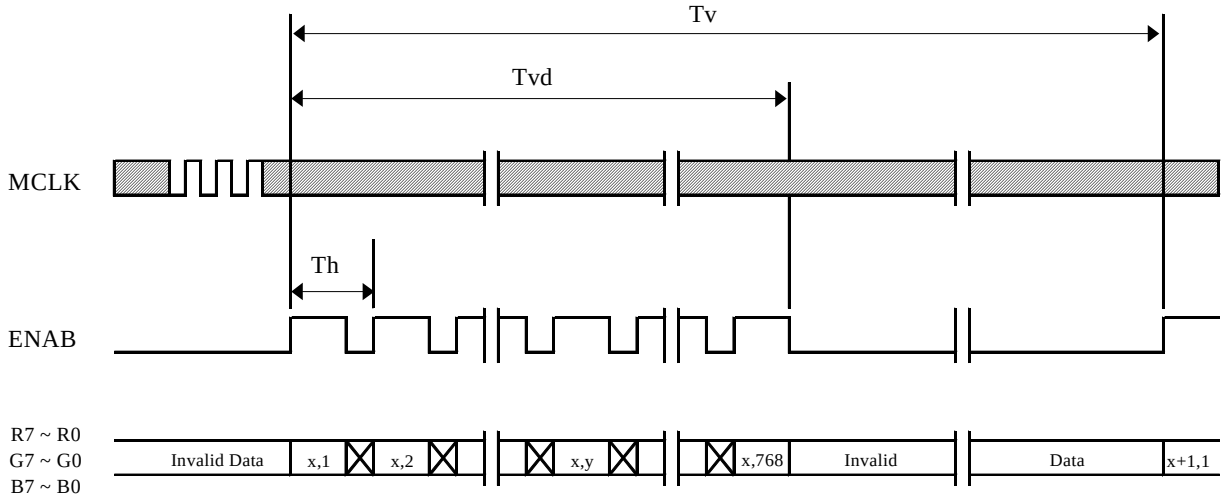

Horizontal Timing Waveforms

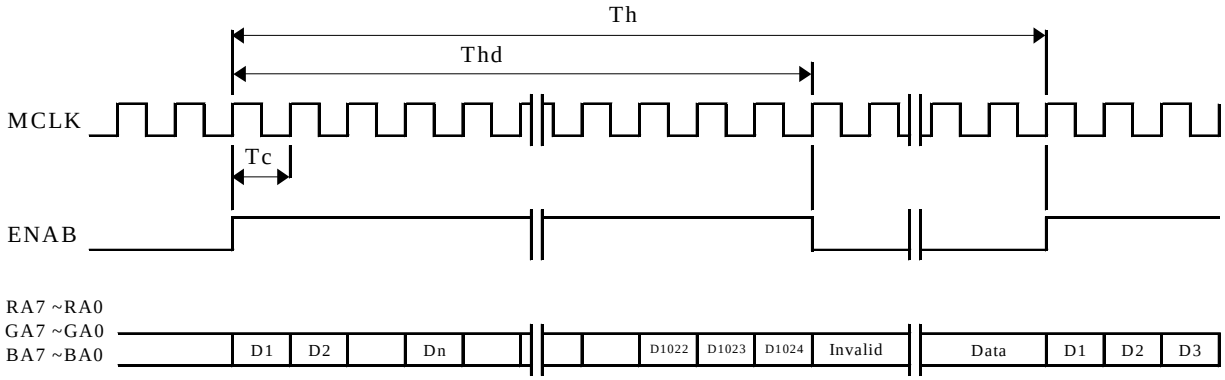

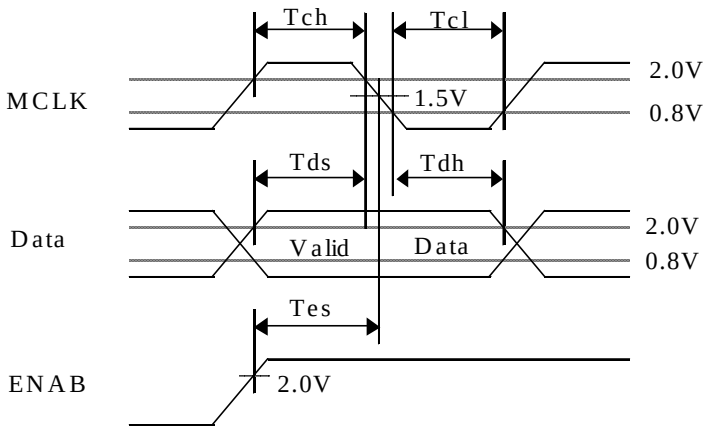

© All Rights Reserved

Vertex LCD Inc.
600 S. Jefferson St. Unit K Placentia, CA 92870
TEL: 714-223-7111 FAX: 714-223-7711

8. Color Input Data Reference

The brightness of each primary color(red, green and blue) is based on the 6-bit gray scale data input for the color; the higher the binary input, the brighter the color. The table below provides a reference for color versus data input.

	Display	R5	R4	R3	R2	R1	R0	G5	G4	G3	G2	G1	G0	B5	B4	B3	B2	B1	B0
Basic Colors	Black	0	0	0	0	0	0	0	0	0	0	0	0	0	0	0	0	0	0
	Blue	0	0	0	0	0	0	0	0	0	0	0	0	1	1	1	1	1	1
	Green	0	0	0	0	0	0	1	1	1	1	1	1	0	0	0	0	0	0
	Light Blue	0	0	0	0	0	0	1	1	1	1	1	1	1	1	1	1	1	1
	Red	1	1	1	1	1	1	0	0	0	0	0	0	0	0	0	0	0	0
	Purple	1	1	1	1	1	1	0	0	0	0	0	0	1	1	1	1	1	1
	Yellow	1	1	1	1	1	1	1	1	1	1	1	1	0	0	0	0	0	0
	White	1	1	1	1	1	1	1	1	1	1	1	1	1	1	1	1	1	1
Red	Red(00) Dark	0	0	0	0	0	0	0	0	0	0	0	0	0	0	0	0	0	0
	Red(01)	0	0	0	0	0	1	0	0	0	0	0	0	0	0	0	0	0	0
	Red(02)	0	0	0	0	1	0	0	0	0	0	0	0	0	0	0	0	0	0
		:	:	:	:	:	:	:	:	:	:	:	:	:	:	:	:	:	:
	Red(61)	1	1	1	1	0	1	0	0	0	0	0	0	0	0	0	0	0	0
	Red(62)	1	1	1	1	1	0	0	0	0	0	0	0	0	0	0	0	0	0
	Red(63) Bright	1	1	1	1	1	1	0	0	0	0	0	0	0	0	0	0	0	0
Green	Green(00)Dark	0	0	0	0	0	0	0	0	0	0	0	0	0	0	0	0	0	0
	Green(01)	0	0	0	0	0	0	0	0	0	0	0	1	0	0	0	0	0	0
	Green(02)	0	0	0	0	0	0	0	0	0	0	1	0	0	0	0	0	0	0
		:	:	:	:	:	:	:	:	:	:	:	:	:	:	:	:	:	:
	Green(61)	0	0	0	0	0	0	1	1	1	1	0	1	0	0	0	0	0	0
	Green(62)	0	0	0	0	0	0	1	1	1	1	1	0	0	0	0	0	0	0
	Green(63)Bright	0	0	0	0	0	0	1	1	1	1	1	1	0	0	0	0	0	0
Blue	Blue(00) Dark	0	0	0	0	0	0	0	0	0	0	0	0	0	0	0	0	0	0
	Blue(01)	0	0	0	0	0	0	0	0	0	0	0	0	0	0	0	0	0	1
	Blue(02)	0	0	0	0	0	0	0	0	0	0	0	0	0	0	0	0	1	0
		:	:	:	:	:	:	:	:	:	:	:	:	:	:	:	:	:	:
	Blue(61)	0	0	0	0	0	0	0	0	0	0	0	0	1	1	1	1	0	1
	Blue(62)	0	0	0	0	0	0	0	0	0	0	0	0	1	1	1	1	1	0
	Blue(63) Bright	0	0	0	0	0	0	0	0	0	0	0	0	1	1	1	1	1	1
White & Black	Black(00) Dark	0	0	0	0	0	0	0	0	0	0	0	0	0	0	0	0	0	0
	(01)	0	0	0	0	0	1	0	0	0	0	0	1	0	0	0	0	0	1
	(02)	0	0	0	0	1	0	0	0	0	0	1	0	0	0	0	0	1	0
		:	:	:	:	:	:	:	:	:	:	:	:	:	:	:	:	:	:
	(61)	1	1	1	1	0	1	1	1	1	1	0	1	1	1	1	1	0	1
	(62)	1	1	1	1	1	0	1	1	1	1	1	0	1	1	1	1	1	0
	White(63) Bright	1	1	1	1	1	1	1	1	1	1	1	1	1	1	1	1	1	1

© All Rights Reserved

Vertex LCD Inc.
600 S. Jefferson St. Unit K Placentia, CA 92870
TEL: 714-223-7111 FAX: 714-223-7711

9. Block Diagram

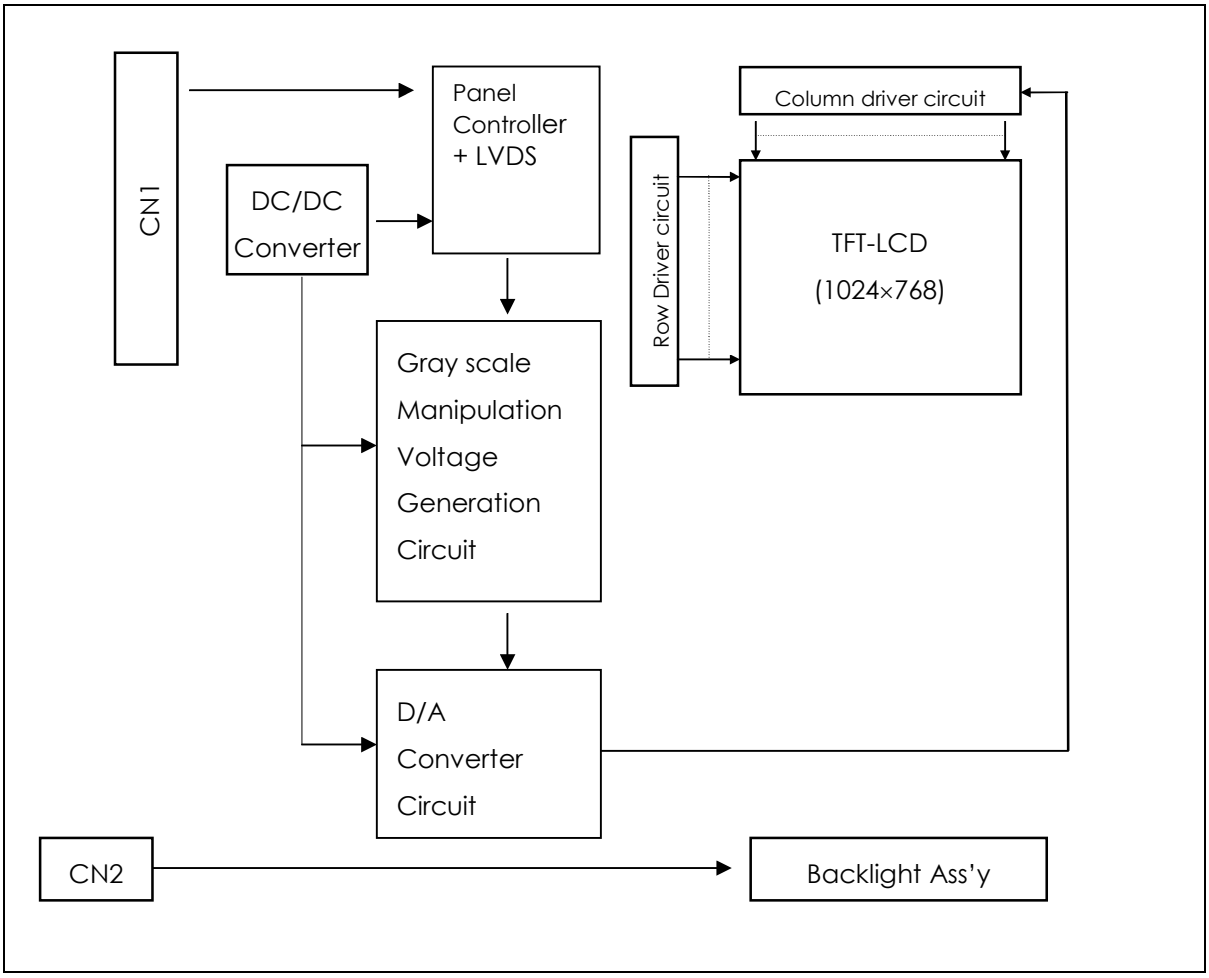

© All Rights Reserved

Vertex LCD Inc.
600 S. Jefferson St. Unit K Placentia, CA 92870
TEL: 714-223-7111 FAX: 714-223-7711

10. Optical Specifications

Optical characteristics are determined in a dark environment at 25°C. The values specified are at an approximate distance 50cm from the LCD surface at a viewing angle of Φ and θ equal to 0°.
Appendix A presents additional information concerning the measurement equipment and method.

Parameter	Symbol	Values			Units	Notes
		Min.	Typ.	Max.		
Contrast Ratio	CR	-	400	-		1
Surface Luminance, white	L_{WH}	1000	1200		cd/m²	2
Luminance Uniformity	δ_{WHITE}		70%			3
Response Time Total(Tr + Td)				32	msec	4
CIE Color Coordinates		-				
Red	x_R	-	0.543	-		
	y_R	-	0.334	-		
Green	x_G	-	0.317	-		
	y_G	-	0.500	-		
Blue	x_B	-	0.156	-		
	y_B	-	0.151	-		
White	x_W	-	0.312	-		
	y_W		0.343			
Viewing Angle						
x axis, right (ø=0°)	θ x	80	89	-	degree	5
x axis, left(ø=180°)	θ x	80	89	-		
y axis, up(ø=90°)	θ y	80	89	-		
y axis, down (ø=270°)	θ y	80	89	-		

Notes 1. Contrast Ratio (CR) is defined mathematically as :

$$\text{Contrast Ratio} = \frac{\text{Surface Luminance with all white pixels}}{\text{Surface Luminance with all black pixels}}$$

2. Surface luminance is the center point across the LCD surface 50cm from the surface with all pixels displaying white. For more information see Appendix B.
3. The uniformity in surface Luminance, δ_{WHITE} is determined by measuring L_{ON} at each test position 1 through 9, and then dividing the minimum L_{ON} of 9 points luminance by maximum L_{ON} of 9 points luminance and multiply by 100 for percentage value. For more information see Appendix B.
   δ_{WHITE} = Minimum (L_{ON1}, L_{ON2}, ...L_{ON9}) * 100 / Maximum (L_{ON1}, L_{ON2}, ...L_{ON9})
4. Response time is the time required for the display to transition from white to black (Rise Time, Tr_R) and from black to white (Decay Time, Tr_D). For additional information see Appendix C.
5. Viewing angle is the angle at which the contrast ratio is greater than 10. The angles are determined for the horizontal or x-axis and the vertical or y-axis with respect to the z-axis which is normal to the LCD surface. For more information see Appendix D.

© All Rights Reserved

Vertex LCD Inc.
600 S. Jefferson St. Unit K Placentia, CA 92870
TEL: 714-223-7111 FAX: 714-223-7711

11. Mechanical Characteristics

The chart below provides general mechanical characteristics for the model LVM121XSB-411-L01. In addition, the figure below is a detailed mechanical drawing of the LCD. Note that dimensions are given for reference purposes only.

Outside dimensions:		
	Horizontal	274.00 ± 0.5 mm
	Vertical	206.30 ± 0.5 mm
	Depth	13.60 ± 0.5 mm
Bezel area:		
	Horizontal	250.40 mm
	Vertical	188.90 mm
Active Display area:		
	Horizontal	254.76 mm
	Vertical	184.32 mm

Weight (approximate): 900 g

Surface Treatment: Hard coating 3H clear.
Anti-reflective treatment of the front polarizer.

© All Rights Reserved

Vertex LCD Inc.
600 S. Jefferson St. Unit K Placentia, CA 92870
TEL: 714-223-7111 FAX: 714-223-7711

12. Mechanical Specification

< FRONT VIEW >

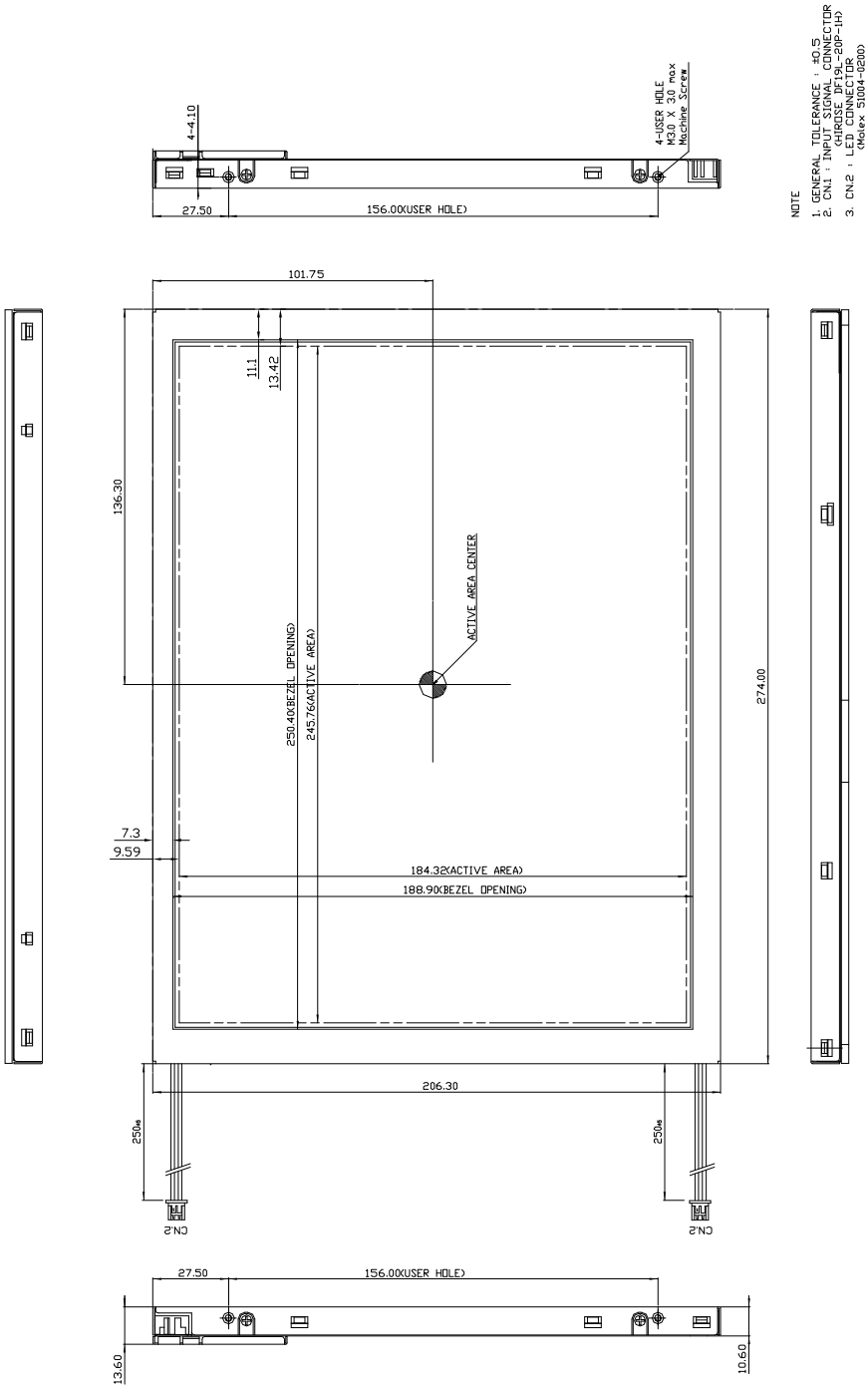

© All Rights Reserved

Vertex LCD Inc.
600 S. Jefferson St. Unit K Placentia, CA 92870
TEL: 714-223-7111 FAX: 714-223-7711

<REAR VIEW>

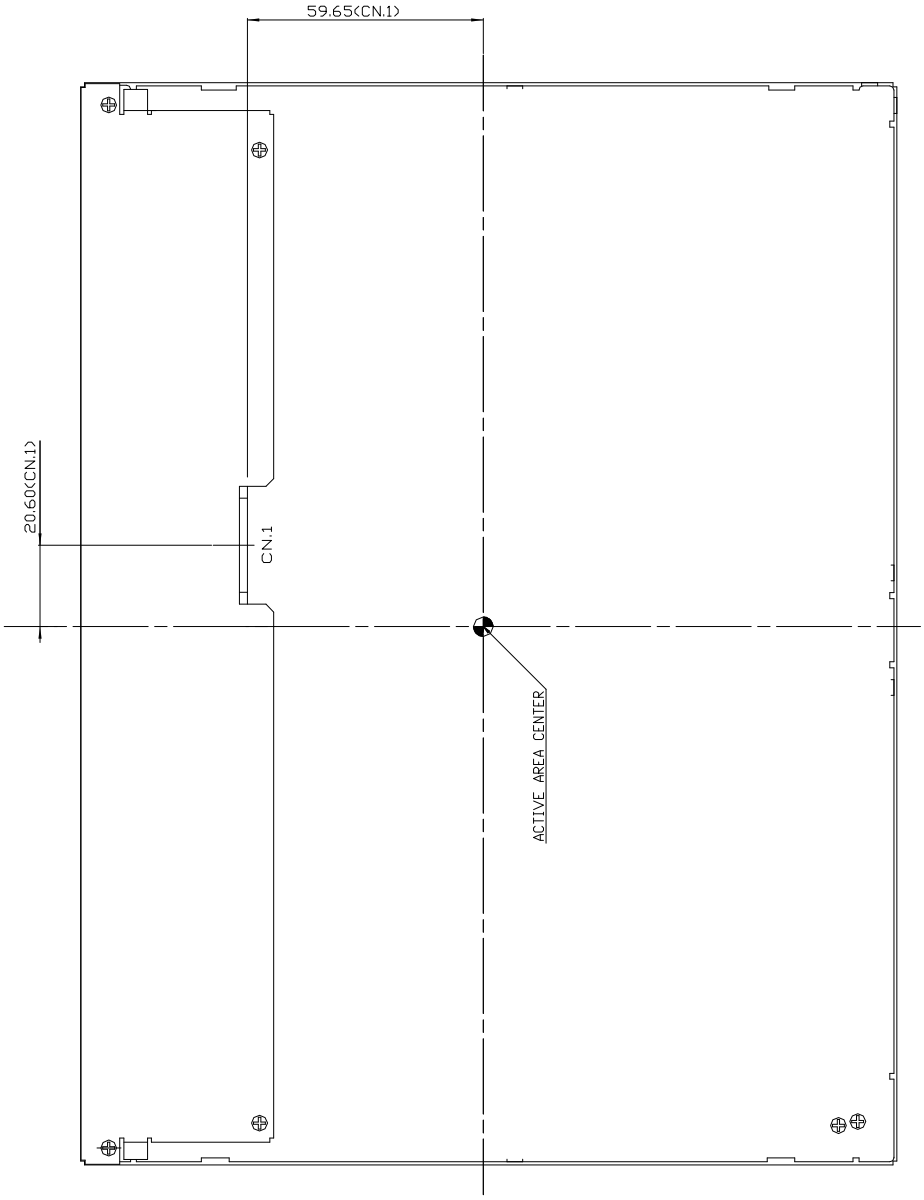

© All Rights Reserved

Vertex LCD Inc.
600 S. Jefferson St. Unit K Placentia, CA 92870
TEL: 714-223-7111 FAX: 714-223-7711

13. Reliability

- Environment test condition.

No.	Test ITEM	Conditions
1	High temperature storage test	Ta = 85 °C, 72hr
2	Low temperature storage test	Ta = -25°C, 72hr
3	High temperature & high humidity operation test	Ta = 85 °C, 80%RH 72hrs (no condensation)
4	High temperature operation test	Ta = 85°C, 72h
5	Low temperature operation test	Ta = - 25 °C, 72h
6	Thermal Shock	Ta = - 25°C ~ 85°C (30 min), 6 cycles
7	Shock test (non-operating)	Gravity : 120G Pulse width: 2ms, half sine wave for X, Y, Z direction
8	Vibration test (non-operating)	Frequency 10 ~ 300 Hz Gravity/AMP: 1.5G Period: X, Y, Z 30 min.

Result Evaluation Criteria
There should be no change which might affect the practical display function when the display quality test is conducted under normal operating condition.

© All Rights Reserved

Vertex LCD Inc.
600 S. Jefferson St. Unit K Placentia, CA 92870
TEL: 714-223-7111 FAX: 714-223-7711

14. Packing Form

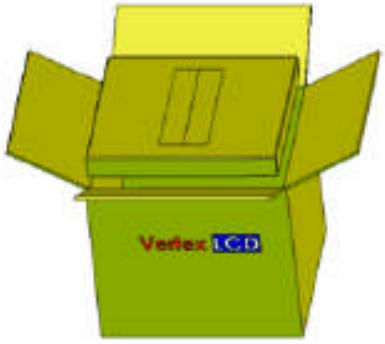

Put a bottom cover on the bottom of the box

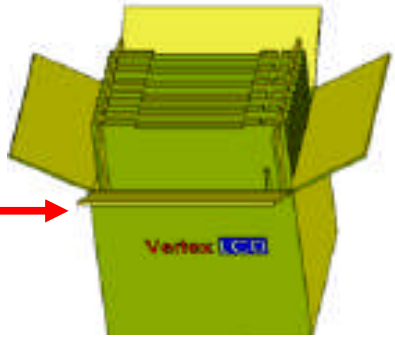

Put Pad into the box

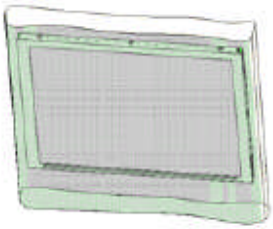

Insert the module into the shielding bag.

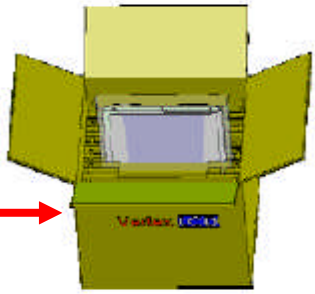

As shown in the figure, place the Modules bundled in the box.

Place a cover on the top of the box.

Seal the box.

a) Total weight : Approx. 8kg
b) Box Size : 335(W)X 298(D) X 298(H)

© All Rights Reserved

Vertex LCD Inc.
600 S. Jefferson St. Unit K Placentia, CA 92870
TEL: 714-223-7111 FAX: 714-223-7711

c) Package quantity in one box : 6 pcs

15. PRECAUTIONS

Please pay attention to the followings when you use this TFT/LCD module.

15.1 MOUNTING PRECAUTIONS

(1) You must mount a module using holes arranged in four corners.

(2) You should consider the mounting structure so that uneven force (ex. twisted stress) is not applied to the module.
And the case on which a module is mounted should have sufficient strength so that external force is not transmitted directly to the module.

(3) Please attach the surface with a transparent protective plate in order to protect the polarizer LC cell.
Transparent protective plate should have sufficient strength in order to resist external force.

(4) You should adopt radiation structure to satisfy the temperature specification.

(5) Acetic acid type and chlorine type materials for the cover case are not desirable because the former generates corrosive gas of attacking the polarizer at high temperature and the latter cause circuit break by electro-chemical reaction.

(6) Do not touch, push or rub the exposed polarizers with glass, tweezers or anything harder than HB pencil lead. And Please do not rub with dust clothes with chemical treatment.
Do not touch the surface df polarizer for bare hand or greasy cloth. (Some cosmetics are detrimental to the polarizer.)

(7) When the surface becomes dusty, please wipe gently with absorbent cotton or other soft materials like chamois soaked with petroleum benzene. Normal-hexane is recommended for cleaning the adhesives used to attach front / rear polarizers. Do not use acetone, toluen and alcohol because they cause chemical damage to the polarizer.

(8) Wipe off saliva or water drops as soon as possible. Their long time contact with polarizer causes deformations and color fading.

(9) Do not open the case because inside circuits do not have sufficient strength.

15.2 OPERATING PRECAUTIONS

(1) The spike noise causes the mis-operation of circuits. It should be lower than following voltage : V = ± 200mV (Over and under shoot voltage).

(2) Response time depends on the temperature. (In lower temperature, it becomes longer.)

(3) Be careful for condensation at sudden temperature change. Condensation makes damage to polarizer or electrical contacted parts. And after fading condensation, smear or spot will occur.

(4) When fixed patterns are displayed for a long time, remnant image is likely to occur.

(5) A module has high frequency circuit. It might be necessary to shield the electromagnetic noise in your integrating system.

(6) The thermal map showing the heat imaging of the module (LVM121XSB-411-L01) is shown in figure 1. Please reference the thermal map for optimum thermal design to maximize the MTBF of LED life.

© All Rights Reserved

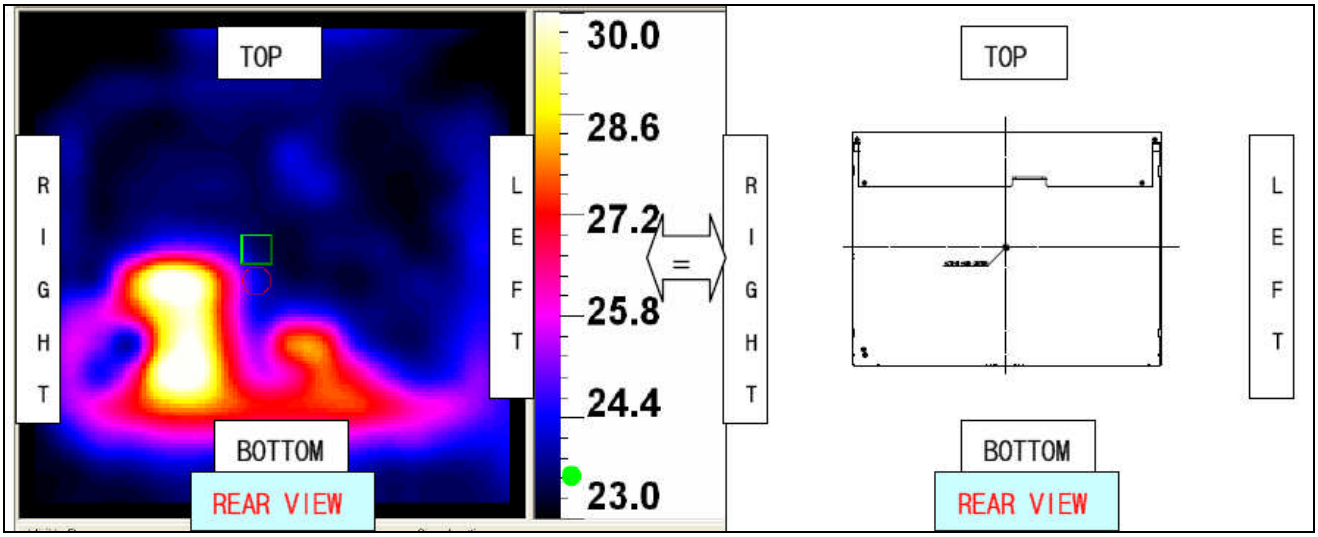

Figure 1. Thermal Map Showing the Heat Imaging of the LVM121XSB-411-L01 (REAR VIEW)

15.3 ELECTROSTATIC DISCHARGE CONTROL

Since a module is composed of electronic circuits, it is not strong to electrostatic discharge. Make certain that treatment persons are connected to ground through wristband etc . . And don't touch I/F pin directly.

15.4 STORAGE

When storing modules for a long time, the following precautions should be followed.

(1) Store them in a dark place. Do not expose the module to sunlight or fluorescent light. Keep the temperature between 5°C and 35 °C at normal humidity.
(2) The polarizer surface should not come in contact with any other object.
It is recommended that they be stored in the container in which they were shipped.

15.5 HANDLING PRECAUTIONS FOR PROTECTION FILM

(1) When the protection film is peeled off, static electricity is generated between the film and polarizer. This should be peeled off slowly and carefully by people who are electrically grounded and with well ion- blown equipment or in such a condition, etc..
(2) The protection film is attached to the polarizer with a small amount of glue. If some stress is applied to rub the protection film against the polarizer during the time you peel off the film, the glue is apt to remain on the polarizer.
Please carefully peel off the protection film without rubbing it against the polarizer.
(3) When the module with protection film attached is stored for a long time, sometimes there remains a very small amount of glue still on the polarizer after the protection film is peeled off.
(4) You can remove the glue easily. When the glue remains on the polarizer surface or its vestige is recognized, please wipe them off with absorbent cotton waste or other soft material like chamois soaked with normal- hexane.

© All Rights Reserved

Vertex LCD Inc.
600 S. Jefferson St. Unit K Placentia, CA 92870
TEL: 714-223-7111 FAX: 714-223-7711

A. Optical Characteristic Measurement Equipment and Method

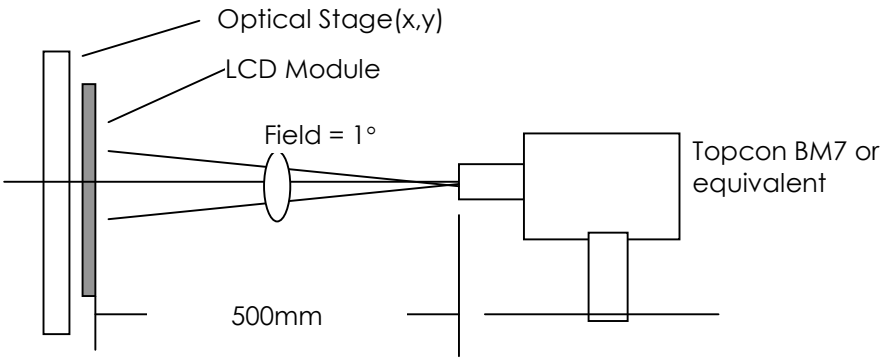

B. Luminance

<measuring point for luminance variation>

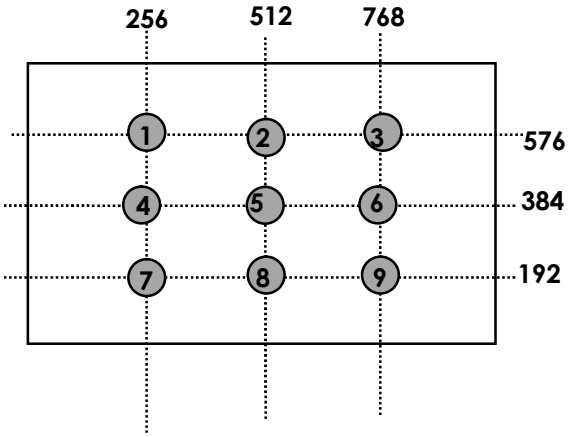

<measuring point for surface luminance >

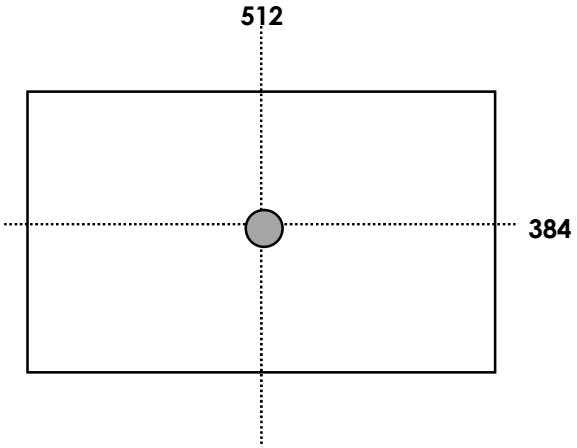

© All Rights Reserved

Vertex LCD Inc.
600 S. Jefferson St. Unit K Placentia, CA 92870
TEL: 714-223-7111 FAX: 714-223-7711

C. Response Time

The response time is defined as the following figure and shall be measured by switching the input signal for "black" and "white".

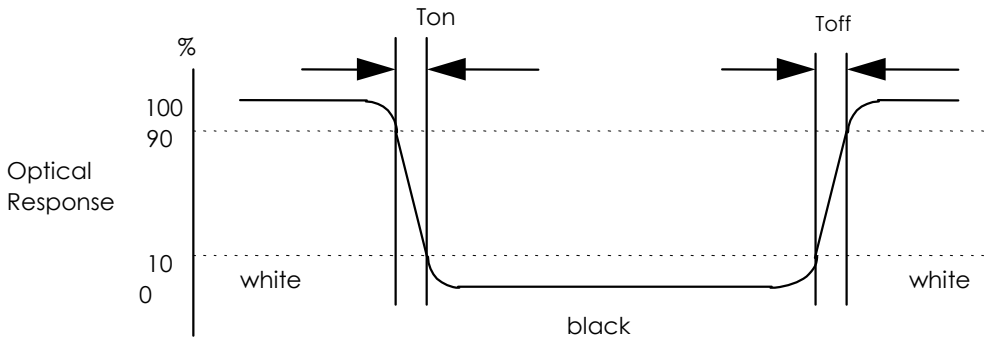

D. Viewing angle

<Definition of viewing angle range>

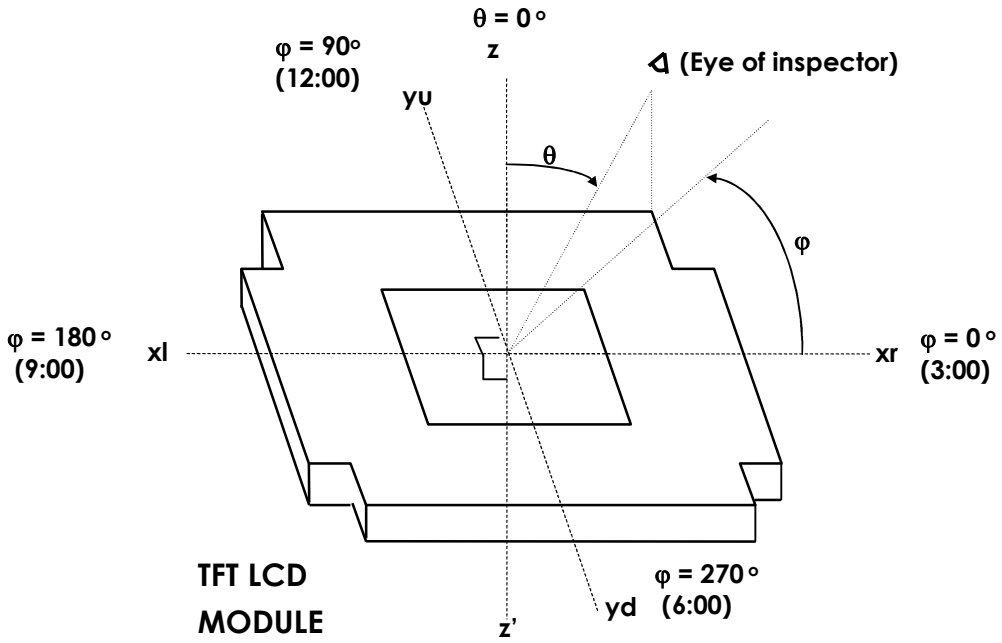

© All Rights Reserved